ai174861266837_W5550800002990_BANDEJAS METAL.pdf 1 30/05/2025 15:44:30

arshelving

DEPTHS (mm): 600 | 800 | 1.000 **HEIGHT (mm):** 2000 | 2500 | 3000

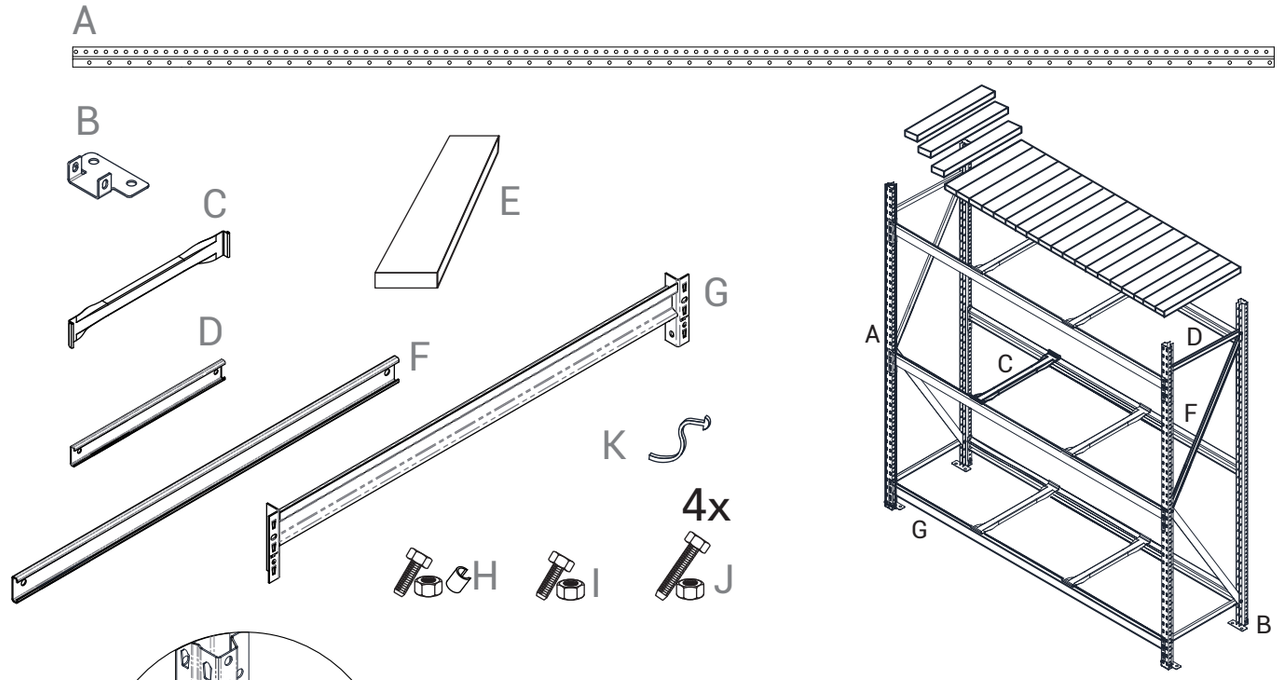

1

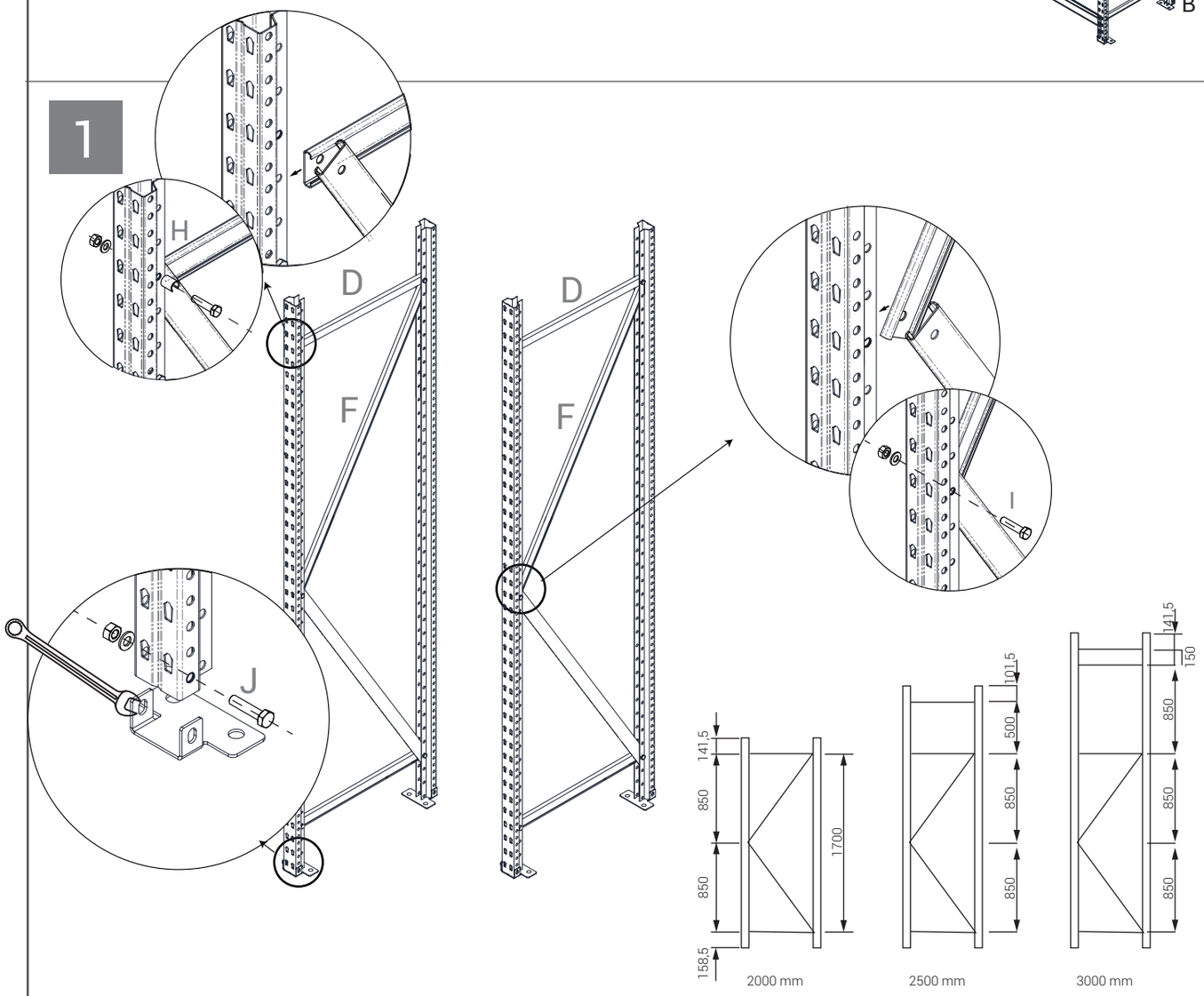

ai174861266837_W5550800002990_BANDEJAS METAL.pdf 2 30/05/2025 15:44:40

2

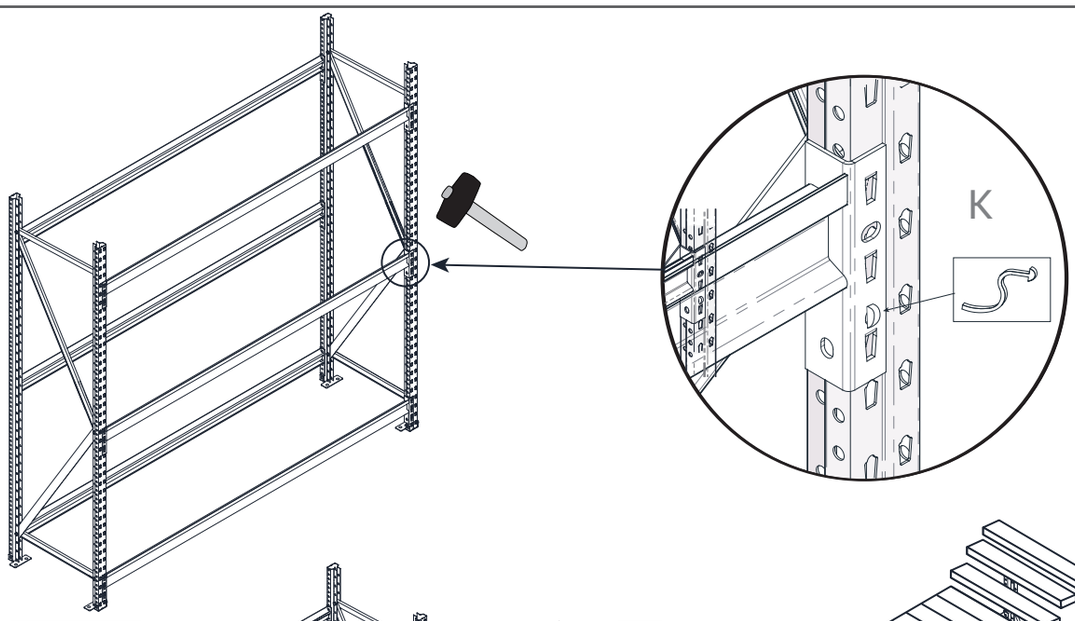

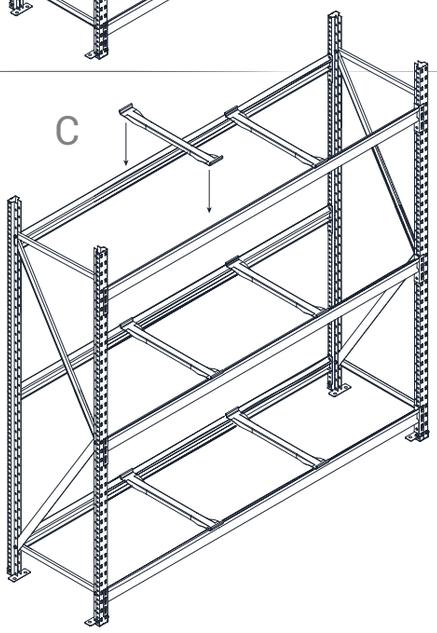

3

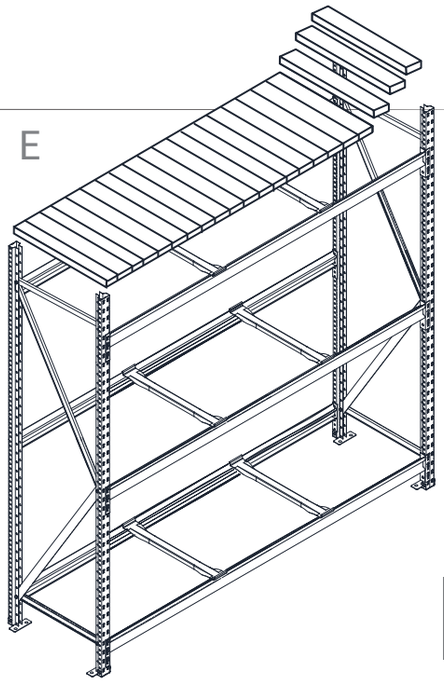

4

5

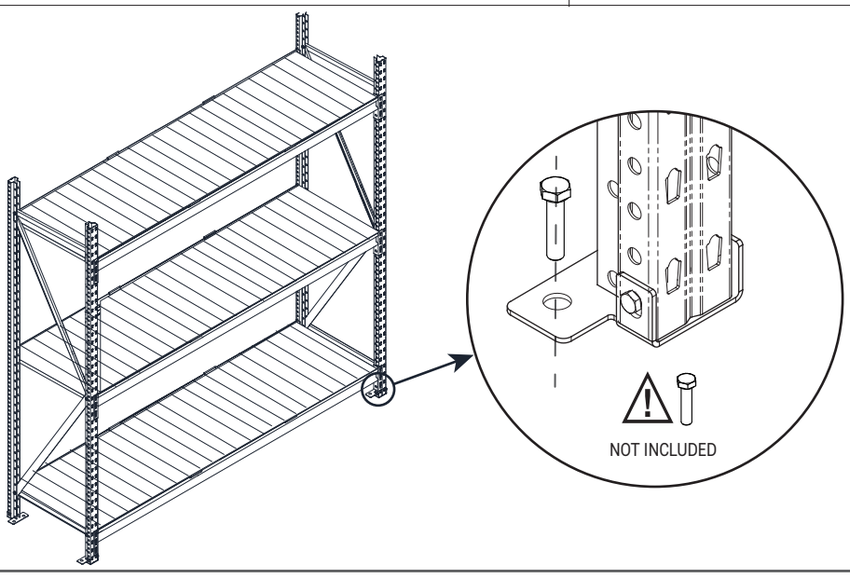

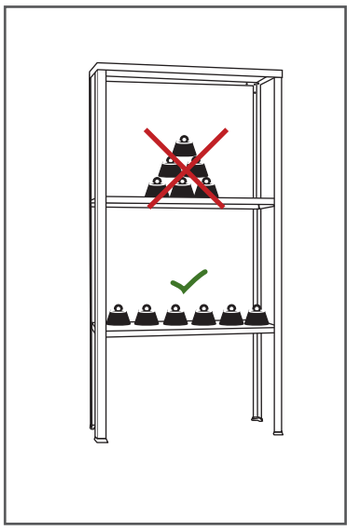

arshelving
www.ar-shelving.com
contact@ar-shelving.com
+421 415 532 077